Nonequilibrium thermodynamics

Phase space

Dimension - 6N

Point in the phase space („phase point“) – determines the system

- it moves
- determines the dynamics of the system

Ensemble – subspace of phase space

Density of points in phase space: fraction of points inside $dq_1 \ldots dp_N$

Distribution funcion → $f_N(q_1, q_2, \ldots, p_{3N}, t) = f_N(q, p, t)$

Normalization condition $\int f_N(q, p, t) dp dq = 1$

Nonequilibrium thermodynamics

Phase space

Dimension - 6N

Point in the phase space („phase point“) – jdetermines the system

- it moves
- determines the dynamics of the system

Ensemble – subspace of phase space

Density of points in phase space: fraction of points inside $dq_1 ... dp_N$

Distribution funcion → $f_N(q_1, q_2, ..., p_{3N}, t) = f_N(q, p, t)$

Normalization condition $\int f_N(q, p, t) dpdq = 1$

Number of phase points in *v* $n = N \int_v f_N(q, p, t) dpdq$

The rate of change of number of Phase points $\frac{dn}{dt} = N \int_v \frac{\partial f_N}{\partial t} dpdq$

- correspond to the phase point flow through the surface of *v*

$$\frac{dn}{dt} = -N \int_S f_N \mathbf{u} \cdot d\mathbf{S} = -N \int_v \nabla \cdot (f_N \mathbf{u}) dpdq$$

$$\mathbf{u} = (\dot{q}_1, ..., \dot{q}_{3N}, \dot{p}_1, ..., \dot{p}_{3N})$$

$$\frac{\partial f_N}{\partial t} + \nabla \cdot (f_N \mathbf{u}) = 0$$

$$\frac{\partial f_N}{\partial t} + \nabla \cdot (f_N \mathbf{u}) = 0$$

Condition for conservation of phase points

$$\nabla \cdot (f_N \mathbf{u}) = \sum_{j=1}^{3N} \frac{\partial}{\partial q_j} f_N \dot{q}_j + \sum_{j=1}^{3N} \frac{\partial}{\partial p_j} f_N \dot{p}_j = \sum_{j=1}^{3N} \left\{ \frac{\partial f_N}{\partial q_j} \dot{q}_j + \frac{\partial f_N}{\partial p_j} \dot{p}_j \right\} + \underbrace{\sum_{j=1}^{3N} \left\{ \frac{\partial \dot{q}_j}{\partial q_j} + \frac{\partial \dot{p}_j}{\partial p_j} \right\} f_N}_{=0}$$

$$\frac{\partial f_N}{\partial t} + \sum_{j=1}^{3N} \frac{\partial f_N}{\partial q_j} \dot{q}_j + \sum_{j=1}^{3N} \frac{\partial f_N}{\partial p_j} \dot{p}_j = 0$$

Hamilton's equation of motion:

$$\dot{p}_i = -\frac{\partial H}{\partial q_i} \qquad \dot{q}_i = \frac{\partial H}{\partial p_i}$$

$$\frac{\partial f_N}{\partial t} + \underbrace{\sum_{j=1}^{3N} \left(\frac{\partial H}{\partial p_j} \frac{\partial f_N}{\partial q_j} - \frac{\partial H}{\partial q_j} \frac{\partial f_N}{\partial p_j} \right)}_{\text{„Poisson bracket“ } \{H, f_N\}} = 0 \quad \longleftrightarrow \quad \frac{\partial f_N}{\partial t} + \{H, f_N\} = 0$$

Liouville equation

$$\frac{\partial f_N}{\partial t} + \sum_{j=1}^{N} \frac{\mathbf{p}_j}{m_j} \cdot \nabla_{rj} f_N + \sum_{j=1}^{N} \mathbf{F_j} \cdot \nabla_{\mathbf{p}j} f_N = 0$$

In cartesian coordinates.

$$i\frac{\partial f_N}{\partial t} = Lf_N$$

Same as Schrödinger equation

Liouville operator

$$L = -i\left(\sum_{j=1}^{N}\frac{\mathbf{p}_j}{m_j}\cdot\nabla_{\mathbf{r}j} + \sum_{j=1}^{N}\mathbf{F}_j\cdot\nabla_{\mathbf{p}j}\right)$$

$$f_N\ \mathbf{p},\mathbf{r},t\ = e^{-iLt} f_N\ \mathbf{p},\mathbf{r},0$$

„Time displacement operator“ – it shifts f_N by time t

Ensemble average of dynamical variable at time t

$$\langle A(t)\rangle = \int A(p,q,t)\, f_N \;\; p,q,t \;\; dpdq$$

Time dependent ensemble average

It depends on only few variables

$$\langle U\rangle = \sum_{i,j} \int \cdots \int u(\mathbf{r}_i,\mathbf{r}_j)\, f_N \;\; \mathbf{r}_1,\ldots,\mathbf{p}_N,t \;\; d\mathbf{r}_1\ldots d\mathbf{p}_N$$

Can be integrated of other (majority) of variables → *Reduced distribution function*

$$f_N^{(n)} \;\; \mathbf{r}_1,\ldots,\mathbf{r}_n,\mathbf{p}_1,\ldots,\mathbf{p}_n,t \;\; = \frac{N!}{(N-n)!} \int \cdots \int f_N \;\; \mathbf{r}_1,\ldots,\mathbf{p}_N,t \;\; d\mathbf{r}_{n+1}\ldots d\mathbf{r}_N d\mathbf{p}_{n+1}\ldots d\mathbf{p}_N$$

$$f^{(n)} \;\; \mathbf{r}^n,\mathbf{p}^n,t$$

Distribution function

(N,V,T)

Probability that molecule 1 is in v dr_1 around r_1 … N v dr_N around r_N

$$P^{(N)}(r_1,...,r_N)dr_1...dr_N = \frac{e^{-\beta U_N} dr_1...dr_N}{Z_N}$$

Probability that molecule 1 is in dr_1 around r_1, ..., n in dr_n around r_n and other molecules are anywhere:

$$P^{(n)}(r_1,...,r_n)dr_1...dr_n = \frac{\int \cdots \int e^{-\beta U_N} dr_{n+1}...dr_N}{Z_N}$$

Probability that any molecule is in dr_1 around r_1, ..., n in dr_n around r_n and other molecules are anywhere:

$$\rho^{(n)}(r_1,...,r_n) = \frac{N!}{(N-n)!} P^{(n)}(r_1,...,r_n)$$

$\rho^{(1)}$

The simplest distribution function

Crystal – periodic function

Liquid – a constant

$$\frac{\int \rho^{(1)}(r_1)dr_1}{V} = \rho^{(1)} = \frac{N}{V} = \rho$$

Ensemble average of dynamical variable at time t

$$\langle A(t)\rangle = \int A(p,q,t)\, f_N \;\; p,q,t \;\; dpdq$$

Time dependent ensemble average

It depends on only few variables

$$\langle U\rangle = \sum_{i,j} \int \cdots \int u(\mathbf{r}_i,\mathbf{r}_j)\, f_N \;\; \mathbf{r}_1,\ldots,\mathbf{p}_N,t \;\; d\mathbf{r}_1\ldots d\mathbf{p}_N$$

Integration over other (majority of) variables → *Reduced distribution function*

$$f_N^{(n)} \;\; \mathbf{r}_1,\ldots,\mathbf{r}_n,\mathbf{p}_1,\ldots,\mathbf{p}_n,t \;\; = \frac{N!}{(N-n)!}\int \cdots \int f_N \;\; \mathbf{r}_1,\ldots,\mathbf{p}_N,t \;\; d\mathbf{r}_{n+1}\ldots d\mathbf{r}_N d\mathbf{p}_{n+1}\ldots d\mathbf{p}_N$$

$$f^{(n)} \;\; \mathbf{r}^n,\mathbf{p}^n,t$$

$$\frac{\partial f_N}{\partial t} + \sum_{j=1}^{N} \frac{\mathbf{p}_j}{m_j}\cdot\nabla_{rj} f_N + \sum_{j=1}^{N} \mathbf{F_j}\cdot\nabla_{\mathbf{p}j} f_N = 0$$

$$\Downarrow$$

$$\frac{\partial f^{(n)}}{\partial t} + \sum_{j=1}^{n} \frac{\mathbf{p}_j}{m_j}\cdot\nabla_{\mathbf{r}j} f^{(n)} + \sum_{j=1}^{n} \mathbf{X}_j\cdot\nabla_{\mathbf{p}j} f^{(n)} + \sum_{i,j=1}^{n} \mathbf{F}_{ij}\cdot\nabla_{\mathbf{p}j} f^{(n)} + \sum_{j=1}^{n}\int\int \mathbf{F}_{j,n+1}\cdot\nabla_{\mathbf{p}j} f^{(n+1)} d\mathbf{r}_{n+1} d\mathbf{p}_{n+1} = 0$$

Bogoliubov, Born, Green, Kirkwood, Yvon hierarchy (BBGKY).

Time-dependent analogy of equilibrium equations (Kirkwood).
solution ???

Kirkwoodova equation

$$kT\ln\rho^{(n)}\ 1,\ldots,n,\xi\ = kT\ln\rho + kT\ln\rho_{N-1}^{(n-1)}\ 2,\ldots,n\ - \xi\sum_{j=2}^{n}u(r_{ij}) + \frac{1}{N}\int_0^{\xi}\int_V\int u(r_{12})\rho^{(2)}\ r_1,r_2,\xi\ dr_1dr_2d\xi$$

$$-\int_0^{\xi}\int u(r_{1,n+1})\frac{\rho^{(n+1)}\ 1,\ldots,n,n+1,\xi}{\rho^{(n)}\ 1,\ldots,n,\xi}dr_{n+1}d\xi$$

n=2

$$-kT\ln g^2\ 1,2,\xi\ = \xi u(r_{12}) + \rho\int_0^{\xi}\int_V u\ r_{13}\left[\frac{g^{(3)}\ 1,2,3,\xi}{g^{(2)}\ 1,2,\xi} - g^{(2)}\ 1,3,\xi\right]dr_3d\xi$$

Cannot be solved without approximation

$$\frac{\partial f^{(n)}}{\partial t}+\sum_{j=1}^{n}\frac{\mathbf{p}_j}{m_j}\cdot\nabla_{\mathbf{r}j}f^{(n)}+\sum_{j=1}^{n}\mathbf{X}_j\cdot\nabla_{\mathbf{p}j}f^{(n)}+\sum_{i,j=1}^{n}\mathbf{F}_{ij}\cdot\nabla_{\mathbf{p}j}f^{(n)}+\sum_{j=1}^{n}\int\int\mathbf{F}_{j,n+1}\cdot\nabla_{\mathbf{p}j}f^{(n+1)}d\mathbf{r}_{n+1}d\mathbf{p}_{n+1}=0$$

Bogoliubov, Born, Green, Kirkwood, Yvon hierarchy (BBGKY).

Solution for special cases only – gases with low density
- Intermolecular collisions are less likely
- Properties depends on single particle only
- Only reduced distribtuion function of the first order is required

$$f_j^{(1)}\ \mathbf{r}^n,\mathbf{p}^n,t$$

... „singlet“ distribution of component *j*

- Central expression in the transport phenomena
- Description of mass transport

$$f_j\ \mathbf{r},\mathbf{v}_j,t$$

Simplified notation for gases.

Normalization conditions:

$$\rho_j\ \mathbf{r},t\ =\int f_j\ \mathbf{r},\mathbf{v}_j,t\ d\mathbf{v}_j$$

Density of particles *j* around **r**

$$N_j=\int\int f_j\ \mathbf{r},\mathbf{v}_j,t\ d\mathbf{r}d\mathbf{v}_j$$

Total number of molecules *j*

Average velocity of molecules *j* in the vicinity of **r**
~ flow of molecules *j*

$$\mathbf{v}_j\ \mathbf{r},t\ =\frac{1}{\rho_j}\int\mathbf{v}_j f_j\ \mathbf{r},\mathbf{v}_j,t\ d\mathbf{v}_j$$

Boltzmann equation

Assuming that it is sufficient to consider only two-particle interactions
Number of molecules in the phase space volume element d**r**d**v**$_j$ around (**r**,**v**$_j$**):** $f_j d\mathbf{r} d\mathbf{v}_j$

No collision:

$$f_j\ \mathbf{r},\mathbf{v}_j,t\ = f_j\left(\mathbf{r}+\mathbf{v}_j dt,\mathbf{v}_j+\frac{\mathbf{X}_j}{m_j}dt,t+dt\right)$$

(**X** – external forces)

Motion of molecules not colliding in *dt*

Molecules follow given trajectory (velocity **v-v+dv**) around **r**

$\Gamma_{ji}^{(-)}$ Number of molecules diverged away from the trajectory due to collision with type *i*

$\Gamma_{ji}^{(+)}$ Number of molecules joining the trajectory due to collision with type *i* molecules

$$f_j\left(\mathbf{r}+\mathbf{v}_j dt,\mathbf{v}_j+\frac{\mathbf{X}_j}{m_j}dt,t+dt\right)d\mathbf{r}d\mathbf{v}_j = f_j\ \mathbf{r},\mathbf{v}_j,t\ d\mathbf{r}d\mathbf{v}_j+\sum_i \Gamma_{ji}^{(+)}-\Gamma_{ji}^{(-)}\ d\mathbf{r}d\mathbf{v}_j dt$$

$$\downarrow$$

$$\frac{\partial f_i}{\partial t}+\mathbf{v}_j\cdot\nabla_{\mathbf{r}} f_j+\frac{\mathbf{X}_j}{m_j}\cdot\nabla_{\mathbf{v}j} f_j=\sum_i \Gamma_{ij}^{(+)}-\Gamma_{ij}^{(-)}$$

„Streaming“ – changes
Due to motion without collisions

Changes due to
intermolecular collisions

Determining $\Gamma_{ji}^{(-)} d\mathbf{r} d\mathbf{v}_j dt$

Molecule *j* in ($\mathbf{r}$,$\mathbf{v}_j$)

Impact parameter (b,b+db)

Relative velocity $\mathbf{g}_{ij} = (\mathbf{v}_i - \mathbf{v}_j)$

A ... Range of inter-molecular forces

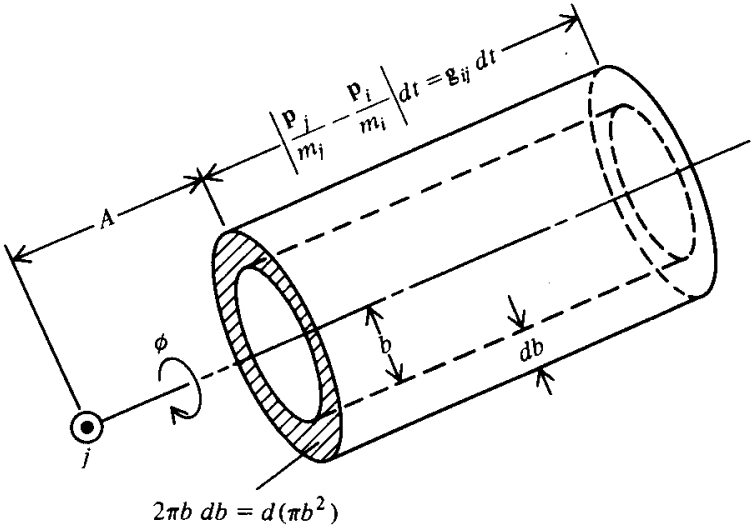

Number of molecules *i* in volume cylinder: $2\pi f_i \left(\mathbf{r}, \mathbf{v}_i, t\right) g_{ij} b db dt$

Number of collision between *i* a *j* within dt: $2\pi dt \int\int f_i \left(\mathbf{r}, \mathbf{v}_i, t\right) g_{ij} b db d\mathbf{v}_i$

Number of molecules *j* in d$\mathbf{r}$d$\mathbf{v}_j$ $f \left(\mathbf{r}, \mathbf{v}_j, t\right) d\mathbf{r} d\mathbf{v}_j$

$$\Gamma_{ji}^{(-)} d\mathbf{r} d\mathbf{v}_j dt = 2\pi d\mathbf{r} d\mathbf{v}_j dt \int\int f_j \left(\mathbf{r}, \mathbf{v}_j, t\right) f_i \left(\mathbf{r}, \mathbf{v}_i, t\right) g_{ij} b db d\mathbf{v}_i$$

$$\Gamma_{ji}^{(-)} = 2\pi \int\int f_j \left(\mathbf{r}, \mathbf{v}_j, t\right) f_i \left(\mathbf{r}, \mathbf{v}_i, t\right) g_{ij} b db d\mathbf{v}_i$$

Assumption that f_i and f_j do not correlate !
„Molecular chaos assumption“

$$\Gamma_{ji}^{(+)} = 2\pi \int\int f_i\ \mathbf{r}, \mathbf{v}_j', t\ \ f_j\ \mathbf{r}, \mathbf{v}_i', t\ \ g_{ij} b db d\mathbf{v}_i' = 2\pi \int\int f_i' f_j' g_{ij} b db d\mathbf{v}_i'$$

$$\frac{\partial f_i}{\partial t} + \mathbf{v}_j \cdot \nabla_{\mathbf{r}} f_j + \frac{\mathbf{X}_j}{m_j} \cdot \nabla_{\mathbf{v}j} f_j = \sum_i \Gamma_{ij}^{(+)} - \Gamma_{ij}^{(-)}$$

$$\frac{\partial f_i}{\partial t} + \mathbf{v}_j \cdot \nabla_{\mathbf{r}} f_j + \frac{\mathbf{X}_j}{m_j} \cdot \nabla_{\mathbf{v}j} f_j = 2\pi \sum_i \int\int\ \ f_i' f_j' - f_i f_j\ \ g_{ij} b db d\mathbf{v}_i$$

Boltzmannova rovnice

Nonliner integro-differential equation
Solution – approximations – Hilbert, Chapman, Enskog
Separately for each component of gas phase
Dependence on the character of inter-molecular potentials – f_i'

Time-correlation function

Green, Kubo

Time-correlation function – nonequilibrium statistical mechanics

- it corresponds to partition function in equilibrium statistical mechanics

Hold in classical limit as well as in quantum description

Phase space: p(0), q(0) → p(t), q(t)

$$p(t) = p(p,q;t)$$

$$q(t) = q(p,q;t)$$

$$A\ \ p(t),q(t)\ \ = A(p,q;t) = A(t)$$

A is a function defined in the phase space

$$C(t) = \langle A(0)A(t)\rangle = \int \cdots \int dpdqA(p,q;0)A(p,q;t)\,f(p,q)$$

Classical t-c function

Equilibrium distribution function

$$\mathbf{C}(t) = \langle \mathbf{A}(0)\mathbf{A}(t)\rangle = \int \cdots \int dpdq\mathbf{A}(p,q;0)\mathbf{A}(p,q;t)\,f(p,q)$$

Simple example – *A* is a velocity of particular molecule:

$$\mathbf{C}(t) = \langle \mathbf{v}(0)\mathbf{v}(t) \rangle$$

$$\mathbf{C}(t) = \int \cdots \int dp dq \mathbf{v}(p,q;0)\mathbf{v}(p,q;t) f(p,q)$$

- solving equation of motion for particle surrounded by other particles
- averaging initial conditions over equilibrium ensemble
- complicated solution

Advantage – access to otherwise hard-to-get properties (transport coeff.)
– suitable for numerical solution

$$D = \frac{1}{3}\int_0^\infty \langle \mathbf{v}(0)\mathbf{v}(t) \rangle dt$$

Diffusion coefficient – can be obtained for:
- any density
- any interaction potentials (including anisotropic)
- polyatomic molecules

For particular transportation phenomenon – need for appropriate time-correlation function

$$\mathbf{C}(t) = \langle \mathbf{v}(0)\mathbf{v}(t) \rangle$$

Correlation function for particle velocity

$$\mathbf{C}(0) = \langle \mathbf{v}(0)\mathbf{v}(0) \rangle$$

Corresponds to average v^2 ... (3kT/m)

With increasing time the number of collision increases and the velocity deviates from the initial one
After a time *t* the velocity will not be correlated with the initial one: **C**(t)=0

$$\mathbf{C}(0) = 3kT/m$$
$$\mathbf{C}(t) = 0$$

Approximation:
Exponential decay

$$\mathbf{C}(t) = (3kT/m)\exp(-t/\tau)$$

Application of TC metodology:
Time dependent perturbation – time dependent response:
Fourier analysis of „frequency dependent susceptibility“
Example – time-dependent external electric field – time-dependent current in conductor
Current density described via frequency-dependent conductance σ(ω)
(interaction of molecules with light)

$$\sigma(\omega) = \frac{1}{kT}\int_0^\infty dt e^{-i\omega t} \langle J(0)J(t) \rangle$$

Fourier-Laplace transformation

$$J(t) = \sum_j q_j v_j$$

Charge
Velocity along the field direction

In general – application of time-dependent perturbation – analysis of „response“
Response is linearly dependent on the perturbation: **LINEAR RESPONSE THEORY**

Correlation of two different properties:

$$\psi(\omega) = \int_0^\infty dt e^{-i\omega t} \langle A(0)B(t) \rangle$$

$A \quad p(t), q(t)$

$B \quad p(t), q(t)$

ψ ... Generalized susceptibility

Example: **Absorption of light**

The shape of IR bends can be obtained by Fourier-Laplace transformation of autocorrelation function of dipole moment !

System of N interacting molecules in quantum state *i*
System interacts with electric field having frequency ω

$$\mathbf{E}(t) = E_0 \boldsymbol{\varepsilon} \cos \omega t = \frac{E_0 \boldsymbol{\varepsilon}}{2} \; e^{i\omega t} + e^{-i\omega t}$$

Interaction between the field and molecule: $H^{(1)}(t) = -\mathbf{M}\cdot\mathbf{E}(t)$

Operator of total dipole moment

Golden rule: transition probability

$$P_{i\to f}(\omega) = \frac{\pi E_0^2}{2\hbar^2}\left|\langle f|\boldsymbol{\varepsilon}\cdot\mathbf{M}|i\rangle\right|^2\left[\delta\ \omega_{fi}-\omega\ +\delta\ \omega_{fi}+\omega\ \right]$$

Multiplying by hω/2π → energy lost velocity transition to (final) state *f*

Summing over all *i* and *f* → total lost

Multiplying by the probability that the system is in state *i*

$$-\dot{E}_{rad} = \sum_i\sum_f \rho_i\hbar\omega_{fi}P_{i\to f}(\omega) = \frac{\pi E_0^2}{2\hbar^2}\sum_f\sum_i \omega_{fi}\rho_i\left|\langle f|\boldsymbol{\varepsilon}\cdot\mathbf{M}|i\rangle\right|^2\left[\delta\ \omega_{fi}-\omega\ +\delta\ \omega_{fi}+\omega\ \right]$$

$$-\dot{E}_{rad} = \frac{\pi E_0^2}{2\hbar^2}\sum_f\sum_i \omega_{fi}(\rho_i-\rho_f)\left|\langle f|\boldsymbol{\varepsilon}\cdot\mathbf{M}|i\rangle\right|^2\delta\ \omega_{fi}-\omega$$

System in equilibrium:

$$\rho_f = \rho_i e^{-\beta\hbar\omega_{fi}}$$

$$\rho_i-\rho_f = \rho_i(1-e^{-\beta\hbar\omega_{fi}})$$

$$-\dot{E}_{rad} = \frac{\pi E_0^2}{2\hbar^2}\ 1-e^{-\beta\hbar\omega}\ \ \omega\sum_f\sum_i \rho_i\left|\langle f|\boldsymbol{\varepsilon}\cdot\mathbf{M}|i\rangle\right|^2\delta\ \omega_{fi}-\omega$$

dE_{rad} ... Radiation intensity (expressed as a flux) *times* transition probability (cross section)

$$S = \frac{v}{8\pi}\varepsilon E_0^2 = \frac{c}{8\pi} n E_0^2$$

Poynting vector … incident flux of radiation

$$\left(-\frac{\dot{E}_{rad}}{S} =\right)\alpha(\omega) = \frac{4\pi^2}{\hbar c n}\ 1-e^{-\beta\hbar\omega}\ \omega\sum_f\sum_i \rho_i \left|\langle f|\boldsymbol{\varepsilon}\cdot\mathbf{M}|i\rangle\right|^2 \delta\ \omega_{fi}-\omega$$

„Absorption lineshape“ *I*

$$I(\omega) = \frac{3\hbar c n\alpha(\omega)}{4\pi^2\omega\ 1-e^{-\beta\hbar\omega}} = 3\sum_f\sum_i \rho_i \left|\langle f|\boldsymbol{\varepsilon}\cdot\mathbf{M}|i\rangle\right|^2 \delta\ \omega_{fi}-\omega$$

<u>Time dependency of wavefunciton *vs.* Time dependency of operator</u>

$$\chi(0), A(t)\psi(0) = \chi(t), A(0)\psi(t)$$

$$i\hbar\frac{\partial\psi}{\partial t} = H\psi \qquad \psi(t) = \exp\left(-\frac{iHt}{\hbar}\right)\psi(0) = U(t)\psi(0)$$

$$\chi(0), A(t)\psi(0) = \chi(t), A(0)\psi(t) = U(t)\chi(0), A(0)U(t)\psi(0) = \chi(0), U(t)^* A(0)U(t)\psi(0)$$

$$A(t) = e^{iHt/\hbar}A(0)e^{-iHt/\hbar}$$

$$I(\omega)=\frac{3\hbar cn\alpha(\omega)}{4\pi^2\omega\ 1-e^{-\beta\hbar\omega}}=3\sum_f\sum_i\rho_i\left|\langle f|\boldsymbol{\varepsilon}\cdot\mathbf{M}|i\rangle\right|^2\delta\ \omega_{fi}-\omega$$

Transformation to Heisenberg form using FT delta function

$$\delta\ \omega\ =\frac{1}{2\pi}\int_0^\infty e^{i\omega t}dt$$

$$I(\omega)=\frac{3}{2\pi}\sum_f\sum_i\rho_i\langle i|\boldsymbol{\varepsilon}\cdot\mathbf{M}|f\rangle\langle f|\boldsymbol{\varepsilon}\cdot\mathbf{M}|i\rangle\int_{-\infty}^{\infty}dt\cdot\exp\left[\frac{E_f-E_i}{\hbar}-\omega\right]it$$

i and *f* are eigenfunction of H: $e^{-iE_it/\hbar}\left|i\right\rangle=e^{-iH_0t/\hbar}\left|i\right\rangle$

$$\left\langle f\right|e^{iE_ft/\hbar}=\left\langle f\right|e^{iH_0t/\hbar}$$

$$I(\omega)=\frac{3}{2\pi}\int_{-\infty}^{\infty}dt\cdot e^{-i\omega t}\sum_f\sum_i\rho_i\langle i|\boldsymbol{\varepsilon}\cdot\mathbf{M}|f\rangle\langle f|\boldsymbol{\varepsilon}\cdot\mathbf{M}(t)|i\rangle$$

$$\mathbf{M}(t)=e^{iH_0t/\hbar}\mathbf{M}e^{-iH_0t/\hbar}$$

$$I(\omega) = \frac{3}{2\pi} \int_{-\infty}^{\infty} dt \cdot e^{-i\omega t} \sum_i \rho_i \left\langle i \middle| \boldsymbol{\varepsilon} \cdot \mathbf{M}(0) \boldsymbol{\varepsilon} \cdot \mathbf{M}(t) \middle| i \right\rangle$$

Sumation over *i* – this is just equilibrium ensemble average

$$I(\omega) = \frac{3}{2\pi} \int_{-\infty}^{\infty} dt \cdot e^{-i\omega t} \left\langle \boldsymbol{\varepsilon} \cdot \mathbf{M}(0) \boldsymbol{\varepsilon} \cdot \mathbf{M}(t) \right\rangle$$

For an isotropic fluid – **ε** averaged over all directions

$$I(\omega) = \frac{1}{2\pi} \int_{-\infty}^{\infty} dt \cdot e^{-i\omega t} \left\langle \mathbf{M}(0) \cdot \mathbf{M}(t) \right\rangle$$

Lineshape is just FT of the time-correlation function of the dipole moment operator of the absorbing molecules in the absence of the field !!!

$$I(\omega) = \frac{1}{2\pi} \int_{-\infty}^{\infty} dt \cdot e^{-i\omega t} \left\langle \mathbf{M}(0) \cdot \mathbf{M}(t) \right\rangle$$

Overall dipole moment of the system must be known:

$$\left\langle \mathbf{M}(0) \cdot \mathbf{M}(t) \right\rangle = \left(\sum_{i=1}^{N} \boldsymbol{\mu}_i(0) \right) \cdot \left(\sum_{j=1}^{N} \boldsymbol{\mu}_j(t) \right)$$

„cross-terms“ between molecules *i* a *j* are present as well
In general it cannot be interpreted as a change of dipole moment orientation

In case of sufficient dilution the cross-terms can be neglected:

$$\left\langle \mathbf{M}(0) \cdot \mathbf{M}(t) \right\rangle = \left\langle \sum_{j=1}^{N} \boldsymbol{\mu}_j(0) \cdot \boldsymbol{\mu}_j(t) \right\rangle = N \left\langle \boldsymbol{\mu}_j(0) \cdot \boldsymbol{\mu}_j(t) \right\rangle$$

Knowing the whole spectra for the region – back FT transformation provides correlation function !

$$\left\langle \boldsymbol{\mu}_j(0) \cdot \boldsymbol{\mu}_j(t) \right\rangle = \int_{band} I(\omega) e^{i\omega t} d\omega$$